Original Article

# Mutation Analysis of *SLC20A2* and *SPP2* as Candidate Genes for Familial Idiopathic Basal Ganglia Calcification

Fereshteh Ashtari [1†], Kioomars Saliminejad [2†], Ali Ahani [2], Koorosh Kamali [2], Zhamak Pahlevanzadeh [2], and Hamid Reza Khorram Khorshid [3*]

*1. Neurology Department, Isfahan Neuroscience Research Centre, Isfahan University of Medical Sciences, Isfahan, Iran*
*2. Reproductive Biotechnology Research Center, Avicenna Research Institute, ACECR, Tehran, Iran*
*3. Genetic Research Center, University of Social Welfare and Rehabilitation Science, Tehran, Iran*
*† These authors equally contributed to this work*

## Abstract

**Background:** Familial Idiopathic Basal Ganglia Calcification (IBGC) is a rare neurodegenerative disorder which is usually transmitted as an autosomal dominant trait. IBGC is genetically heterogeneous and *SLC20A2,* on chromosome 8p21.1–8q11.23, is the first gene found in IBGC-affected patients with varied ancestry. On the other hand, several candidate genes for IBGC on chromosome 2q37, including the *SPP2* gene, may play a role in inhibiting calcification.

**Methods:** Totally, 22 members of a three generational Iranian family affected by IBGC, with an autosomal dominant pattern of inheritance were included in this study. DNA was extracted from the whole blood using standard salting out method. To find a mutation responsible for IBGC, we sequenced the coding region of *SLC20A2* as well as promoter and coding region of *SPP2* in the index subject of IBGC-affected family.

**Results:** Pathogenic mutation was found neither in *SLC20A2* nor in *SPP2.*

**Conclusion:** Our results strengthen genetic heterogeneity of this condition. Additional mutation studies are necessary to find a gene or genes responsible for IBGC in this affected family.

*** Corresponding author:**
Hamid Reza Khorram Khorshid, M.D., Ph.D.,
Genetic Research Center,
University of Social Welfare and Rehabilitation Science,
Tehran, Iran
**Tel:** +98 21 22432020
**Fax:** +98 21 22432021
**E-mail:**
hrkk1@uswr.ac.ir;
h.khorramkhorshid@avicenna.ac.ir
**Received:** 5 May 2013
**Accepted:** 27 Jul 2013

*Avicenna J Med Biotech 2013; 5(4): 251-256*

**Keywords:** Familial Idiopathic Basal Ganglia Calcification, Mutation, *SLC20A2* protein, *SPP2* protein

Downloaded from http://www.ajmb.org

## Introduction

Familial idiopathic basal ganglia calcification (IBGC) is a rare neurodegenerative disease which is usually inherited in an autosomal dominant pattern. Familial IBGC is characterized by bilateral symmetric calcification of brain, especially in basal ganglia, dentate nucleus, thalamus, and centrum semiovale [1]. IBGC is a genetically heterogeneous condition and its causative genes and etiology remain unknown at present [2-5].

A whole-genome scan using polymorphic microsatellite markers identified the first chromosomal locus for IBGC (IBGC1) in an American family on chromosome 14q11.2-21.3 [6]. The IBCG1 locus was excluded in an Italian family from South Tyrol; however, results of a genome-wide scan linkage analysis revealed a novel locus on chromosome 2q37 (IBGC2) in this family [7,8]. Several candidate genes for IBGC in the human chromo-

*Copyright © 2013, Avicenna Journal of Medical Biotechnology. All rights reserved.*

some 2q37 region including *Secreted Phosphoprotein 2* (*SPP2*) are known to be important for modulating cellular calcium and could thus be interesting for further investigation [8]. The secreted phosphoprotein-24 *kDa* (Spp24), an extracellular matrix protein, which encoded by the *SPP2* gene may play a role in inhibiting calcification [8,9].

Another locus showing linkage with IBGC was mapped to the 8p21.1-8q11.23 chromosomal region (IBGC3) in a large Chinese family [3]. Further refinement of the IBGC3 locus identified missense mutations, small deletions and splice site mutations in the *SLC20A2* gene, encoding the type III sodium-dependent phosphate transporter 2 (PiT2), in IBGC-affected families of varied ancestry [5,10,11].

To find a pathogenic mutation which may be responsible for this condition, we investigated *SLC20A2* and *SPP2,* the two candidate genes for IBGC, in an affected Iranian family.

## Materials and Methods

### *Subjects*

We investigated a three generational Iranian family affected by IBGC, with an autosomal dominant pattern of inheritance (Figure 1). Twenty two family members were included in the present study. Medical histories for the affected members of the pedigree were obtained through existing medical documenttation and detailed history. The diagnoses of IBGC were made after evaluation of brain CT scans by a neurologist. Two family members (I-1, II-1) were diagnosed with IBGC according to the medical history. The index subject (II5) was clinically affected and analysis of brain CT scan showed calcification in the basal ganglia and other brain regions. Three symptomatic individuals (II-3, II-9, II-13) were also radiologically affected. Written informed consent was obtained from all participants.

### *DNA extraction and mutation analysis using direct sequencing*

DNA was extracted from whole blood using a standard salting out method [12]. Specific primer pairs for the coding region of *SLC20A2* as well as promoter and coding region of *SPP2* were designed by Primer 3 program. The primers sequences and relative PCR length have been shown in tables 1 and 2. The PCR reactions were carried out in final volume of 25 *µl* containing: 10×PCR Buffer (Roche, Germany), 1.5 *mM* $MgCl_2$ (Roche, Germany), 0.4 *mM* of each dNTP (Fermentas, Germany), 5 *pmol* of each primer, 50 *ng* template DNA, 1 *U* Taq DNA polymerase (Roche, Germany) and sterile distilled water up to 25 *µL*. Amplification conditions started with an initial denaturation step of 3 *min* at 94°*C*, followed by 30 cycles of 30 *s* denaturation (94°*C*), 30 *s* annealing (61°*C*) and 30 *s* extension (72°*C*), ended by a final extension for 7 *min* (72°*C*) and final cooling to 4°*C*. All PCR products were subjected to electrophoresis on 1.5% agarose gel prepared in 1×TAE, stained with ethidium bromide and visualized

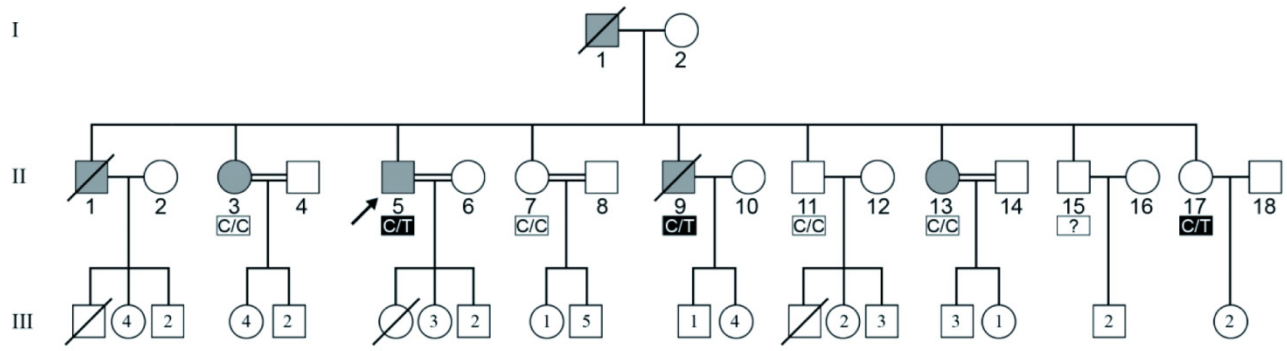


Figure 1. The pedigree of an Iranian IBGC-affected family showing transmission of autosomal dominant trait. Filled symbols represent individuals clinically and radiologically affected. The heterozygous C/T mutation was found in both the affected and unaffected members

Downloaded from http://www.ajmb.org

Table 1. Primer sequences for amplification of the promoter and coding region of the *SPP2* gene

| Region | 5′ →3′ | Size (*bp*) |
|---|---|---|
| **Promoter** | F-CCAGGTGATGTGCAAAAGTG<br>R-TCGTCATCTTCTCCATTCTGG | 599 |
| **Exon 1+2** | F-CAGAAATATTGACCCCAGGA<br>R-GACAGCATTGGAAGGAGGAG | 510 |
| **Exon 3** | F-GCTTTCATGGTGGACAATTC<br>R-CATTTCTGGGATGGGTCTC | 268 |
| **Exon 4** | F-CAATGGAGGCTATCCCTTTCC<br>R-CCTAAGAGGTGGGGTCTGG | 217 |
| **Exon 5** | F-TTTCATGTGCTGACACATCC<br>R-AAATGACTCACTAACAAAGAGTTGC | 172 |
| **Exon 6** | F-AACATTCTGGAACAGTGAGAGG<br>R-TGATCAGAAAAGGGTCTGGTG | 151 |
| **Exon 7** | F-AGAGCCTATGCTTCCCTTTTC<br>R-CAGCAGTTTTAAGGCGTTCAC | 199 |

Table 2. Primer sequences for amplification of the coding region of the *SLC20A2* gene

| Region | 5′ →3′ | Size (*bp*) |
|---|---|---|
| **Exon 2** | F-CATTGTCCAGCACTTTCCAGAG<br>R-GCAAAGTACTGCAGGGAAGCG | 487 |
| **Exon 3** | F-CCTTTAACTGAAGTTAATTGAGTG<br>R-TGTAAACTTTCCTTCTTATGGGTA | 359 |
| **Exon 4** | F-GGCCATAAATGTGTGAAGGTC<br>R-GCTGTGCCTTGACAATGTATG | 393 |
| **Exon 5** | F-CATCAGCTCATGTGATTCCAGG<br>R-CCAGCACCAAATAAACTGATACTG | 443 |
| **Exon 6** | F-GGTGATTCGTTCTCGATTTGGG<br>R-TCCTCCATTAGTAAGGATCATGGC | 309 |
| **Exon 7** | F-CCACACCTGGCCTCAACTTC<br>R-GTGCATTAAAACCAGATTGCCC | 467 |
| **Exon 8** | F-TTGTACTCCACCCTGAGGAC<br>R-GCACGCAATGCTGACTTATGG | 850 |
| **Exon 9** | F-GTATCATGTACATTGCCGCTTGC<br>R-CCATTCTTGCCCACTGTCTCC | 388 |
| **Exon 10** | F-GCAGTCACCCCAGAGAATGT<br>R-TGCATTTTGCACAACCATCTAC | 300 |
| **Exon 11** | F-TAGGGGACTGGGTAATGTTGTAC<br>R-AGCACACATGTCTCCCACACG | 349 |

by exposure to ultraviolet light. To find a pathogenic mutation in the index subject of the pedigree (II-5), the coding region of *SLC20A2* and the promoter and coding region of *SPP2* were sequenced. Traces were analyzed using Mutation Surveyor software (Soft Genetics). To eliminate false positive results, a mutation was only accepted if it was confirmed by bidirectional sequencing.

### *PCR-RFLP designing*

Sequencing results revealed one polymorphism in the promoter region of the *SPP2* gene. For genotyping of the C/T polymorphism (rs13389896) in the promoter region in

Downloaded from http://www.ajmb.org

all family members one PCR-RFLP, with specifically reveres primer, was designed. Briefly, genomic DNA was amplified using forward primer 5'-CCAGGTGATGTGCAAAA GTG-3' and reverse primer 5'-CTCTATTTT AATTTCATTCTTTGGAAG-3'. The PCR products (290 *bp*) were digested with restriction enzymes *Mbo*II (Fermentase) at 37°*C* overnight. DNA fragments were subjected to polyacrylamide gel electrophoresis and stained with silver nitrate. C allele was cut into three fragments 135, 66 and 45 *bp*, while T allele produced four fragments 100, 66, 45 and 35 *bp*.

## Results

The index subject (II5) is a 54 year old man and analysis of a three generational Iranian family with IBGC showed that ages ranged from 45 to 64 years in the four affected members (II3, II5, II9 and II13). Clinical manifestation of IBGC was not found in the proband's siblings II7, II11, II15 and II17 with ages of 54, 40, 46 and 41, respectively. The age at onset of clinical symptoms was not available for any of the affected members. The mean age of members in the third generation was 24 years and the oldest person in this generation was a 35 year old man. Clinical manifestation of IBGC has not been observed so far in any of the third generation members.

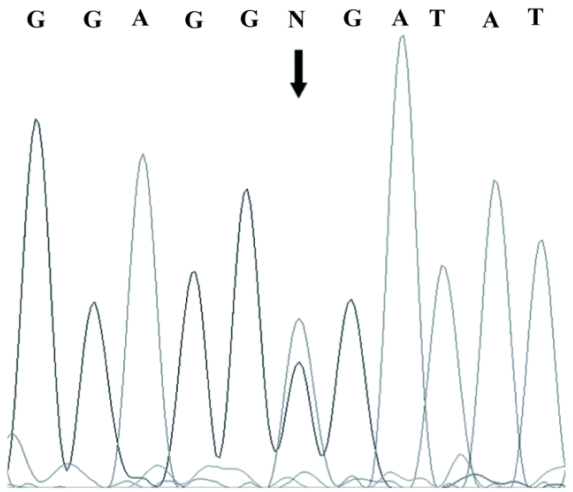


Figure 2. Sequencing result of the promoter region of the *SPP2* gene in the index subject of the pedigree which showed a heterozygous C/T mutation

During the sequencing process of the promoter and coding region of the *SPP2* gene in the index subject, no novel mutation was found. We identified a C/T heterozygote mutation at the promoter region of *SPP2* (Figure 2). The C/T polymorphism (rs13389896) in the promoter region was analyzed in all family members by PCR-RFLP method. Heterozygous C/T polymorphism was found in both the affected and unaffected members of the family (Figure 1). On the other hand, according to the sequencing results of the index subject, no mutation was found in the coding region of *SLC20A2*.

## Discussion

IBGC is a genetically heterogeneous disease and the genes in which mutations are responsible for this condition remain unknown [4-6,13]. So far, linkage to three loci on chromosome 14q (IBGC1), 2q37 (IBGC2) and 8p21.1-q11.23 (IBGC3) have been identified among American, Italian and Chinese families with IBGC, respectively [3,6,8]. However, IBGC1 locus has been excluded in Australian, German, Italian and Serbian IBGC-affected families [2,7,14,15]. Several candidate genes for IBGC on chromosome 2q37 region including *SPP2* are known to be important for modulating cellular calcium [8].

The human *SPP2* gene has been mapped to chromosome 2q37.1 which contains 8 exons and spans about 27 *kb* of DNA [16]. The *SPP2* gene codes for an extracellular matrix protein, secreted phosphoprotein-24 *kDa* (Spp24), which may play a role in inhibiting ectopic calcification [8,9]. The Fetuin-Mineral Complex (FMC) is a high molecular mass complex of calcium, phosphate, fetuin, and matrix Gla protein (MGP) and appears to play a critical role in inhibiting calcification *in vivo* [9]. The Spp24 protein is similar in domain structure to fetuin and like fetuin and MGP, contains several residues of phosphoserine. Exogenous Spp24 associated strongly with the FMC when added to serum containing it. These observations suggest that Spp24 may, like fetuin

Downloaded from http://www.ajmb.org

and MGP, play a role in inhibiting calcification [7,9].

During the sequencing process of the promoter and coding region of *SPP2* in the index subject of our pedigree, only one C/T heterozygous variation in the promoter region was found. This C/T variation was analyzed in all members of the family, and as a result, heterozygous C/T polymorphism was found in both the affected and unaffected members of the family. According to the dbSNPs 'C' is ancestral allele and 'T' is variant allele with a minor allele frequency (MAF) of 0.23 in the default global population from 1094 worldwide individuals. This polymorphism is common in the general population and seems not to be a pathogenic mutation in IBGC-affected patients. Therefore, *SPP2* could be excluded as a candidate gene for IBGC.

The first missense mutation (P521A) associated with IBGC was found in exon 20 of the *CTAGE5* gene in a large American family linked to IBGC1 [13]; however, this mutation was not detected in the two affected Brazilian families as well as in this affected Iranian family [4,17].

Linkage analyses in two Chinese families with IBGC showed a linkage mapping to the 8p21.1-q11.23 chromosomal region (IBGC3) [3,5]. Sequencing results of candidate genes within IBGC3 region in the index subjects of these two Chinese families identified a missense mutation in each family in *SLC20A2* [5]. In IBGC-affected families of Chinese, Brazilian and Spanish ancestry, independent mutations including missense mutations and deletion in the four exons of *SLC20A2* were identified. This was the first gene linked to IBGC in which mutations are distributed worldwide. It was shown that six out of these seven mutations resulted in considerably impaired inorganic phosphate (Pi) transport of PiT2 in *Xenopus laevis* oocytes [5].

Recently, a novel heterozygous frame shift mutation (c.510delA) within *SLC20A2* exon4 was identified in a Chinese family with IBGC [11]. In a recent study by Hsu *et al*, demonstrated mutations in *SLC20A2* are a major cause of the disease in 29 IBGC-affected families of varied ancestry [10].

Accordingly, we sequenced the coding region of *SLC20A2* in the index subject of our pedigree. None of the previously reported *SLC20A2* mutations were found in this person. Wang *et al* did not find any pathogenic mutation in *SLC20A2* in 11 individuals of varied ancestry with either familial or sporadic IBGC. However, their results showed loss-of-function mutations in *SLC20A2* for a large subset of IBGC cases [5].

## Conclusion

In conclusion, no pathogenic mutations in the two candidate genes for IBGC, *SPP2* and *SLC20A2*, were found in our pedigree and our result strengthens genetic heterogeneity of this condition. Additional mutation studies and genome wide linkage analysis or exome sequencing are necessary to find gene or genes responsible for IBGC in this affected family.

## Acknowledgement

The authors would like to thank all the family members for their participation in this study.

## References

1. Manyam BV. What is and what is not Fahr's disease. Parkinsonism Relat Disord 2005;11(2):73-80.
2. Oliveira JR, Spiteri E, Sobrido MJ, Hopfer S, Klepper J, Voit T, et al. Genetic heterogeneity in familial idiopathic basal ganglia calcification (Fahr's disease). Neurology 2004;63(11):2165-2167.
3. Dai X, Gao Y, Xu Z, Cui X, Liu J, Li Y, et al. Identification of a novel genetic locus on chromosome 8p21.1-q11.23 for idiopathic basal ganglia calcification. Am J Med Genet B Neuropsychiatr Genet 2010;153B(7):1305-1310.
4. Lemos RR, Oliveira DF, Zatz M, Oliveira JR. Population and computational analysis of the MGEA6 P521A variation as a risk factor for familial idiopathic basal ganglia calcification (Fahr's disease). J Mol Neurosci 2011(3);43:333-336.
5. Wang C, Li Y, Shi L, Ren J, Patti M, Wang T, et al. Mutations in SLC20A2 link familial idiopathic ba-

Downloaded from http://www.ajmb.org

sal ganglia calcification with phosphate homeostasis. Nat Genet 2012;44(3):254-256.

6. Geschwind DH, Loginov M, Stern JM. Identification of a locus on chromosome 14q for idiopathic basal ganglia calcification (Fahr's disease). Am J Hum Genet 1999;65(3):764-772.
7. Volpato CB, De Grandi A, Buffone E, Pichler I, Gebert U, Schifferle G, et al. Exclusion of linkage to chromosome 14q in a large South Tyrolean family with idiopathic basal ganglia calcification (IBGC). Am J Med Genet B Neuropsychiatr Genet 2008;147B(7):1319-1322.
8. Volpato CB, De Grandi A, Buffone E, Facheris M, Gebert U, Schifferle G, et al. 2q37 as a susceptibility locus for idiopathic basal ganglia calcification (IBGC) in a large South Tyrolean family. J Mol Neurosci 2009;39(3):346-353.
9. Price PA, Nguyen TMT, Williamson MK. Biochemical characterization of the serum fetuin-mineral complex. J Biol Chem 2003;278(24):22153-22160.
10. Hsu SC, Sears RL, Lemos RR, Quintáns B, Huang A, Spiteri E, et al. Mutations in SLC20A2 are a major cause of familial idiopathic basal ganglia calcification. Neurogenetics 2013;14(1):11-22.
11. Zhang Y, Guo X, Wu A. Association between a novel mutation in SLC20A2 and familial idiopathic basal ganglia calcification. PLoS One 2013;8(2): e57060.
12. Miller SA, Dykes DD, Polesky HF. A simple salting out procedure for extracting DNA from human nucleated cells. Nucleic Acids Res 1988;16(3):1215.
13. Oliveira JR, Sobrido MJ, Spiteri E, Hopfer S, Meroni G, Petek E, et al. Analysis of candidate genes at the IBGC1 locus associated with idiopathic basal ganglia calcification (Fahr's disease). J Mol Neurosci 2007;33(2):151-154.
14. Brodaty H, Mitchell P, Luscombe G, Kwok JJ, Badenhop RF, McKenzie R, et al. Familial idiopathic basal ganglia calcification (Fahr's disease) without neurological, cognitive and psychiatric symptoms is not linked to the IBGC1 locus on chromosome 14q. Hum Genet 2002;110(1):8-14.
15. Kostić VS, Lukić-Ječmenica M, Novaković I, Dobričić V, Brajković L, Krajinović M, et al. Exclusion of linkage to chromosomes 14q, 2q37 and 8p21.1-q11.23 in a Serbian family with idiopathic basal ganglia calcification. J Neurol 2011;258(9):1637-1642.
16. Bennett CS, Khorram Khorshid HR, Kitchen JA, Arteta D, Dalgleish R. Characterization of the human secreted phosphoprotein 24 gene (SPP2) and comparison of the protein sequence in nine species. Matrix Biol 2004;22(8):641-651.
17. Saliminejad K, Ashtari F, Kamali K, Edalatkhah H, Khorram Khorshid HR. Analysis of the CTAGE5 P521A variation with the risk of familial idiopathic basal ganglia calcification in an Iranian population. J Mol Neurosci 2013;49(3):614-617.

Downloaded from http://www.ajmb.org